SHNHAI

HIGH-SPEED CENTRIFUGAL ATOMIZER

Instruction manual

Changzhou Kodi Machinery Co.,Ltd.

KODI

CHANGZHOU KODI MACHINERY CO., LTD

www.kodichina.com

Content

Especial remind_____1

Brief introduction of construction_____2

Installation preparation _____3

Starting procedure _____3

Daily maintenance _____ 4

Renewal method of vulnerable parts _____5

Common troubleshooting _____6

Attached figures _____7-10

Changzhou Kodi Machinery Co.,Ltd.

Especial remind

1) The centrifugal spray cannot operate without oil absolutely, should always check the oil level of
oil box and oil supply condition of the oil pump and the oil way. Once find the oil no flowing into
the gearbox, stop working to check right now.
2) The hex nut and acorn nut used to fix the spray disc must be screwed very firmly.
3) The cleanout of the spray disc, the feed liquid distribution plate, the direct bearing and the filter
screen are very important.
4) In order to ensure atomizer's normal work, please make sure connecting up the protective
device controlled by the electric contact oil pressure according to the line diagram.

Brief introduction of construction

The high centrifugal injection cup is the pivotal part of the centrifugal spray drier, and its modular organization is compact, reliable and durable, in addition its maintenance is especially convenient.

1) **Drive gear**

The drive gear of The centrifugal spray in this type is gear drive (see figure A), the primary motor connects up the gearbox by elastic shaft coupling, and then the gearbox makes principal shaft rotate highly in a certain speed range by gear graduation.

2) **Construction of the spray feed**

Feed liquid passes through the liquid pump and enters into the feed pipe, then descends into the feed liquid distribution plate (see figure B), and flows into the inner chamber of the spray disc connected with the principal shaft cone through umpty eyelets evenly distributed in the chamber of the feed liquid distribution plate. Under the force of centrifugal pull, feed liquid is sprayed out as the shape of tiny atomizing liquid drop, and then forms mist.

3) **Lubrication apparatus**

Large-sized centrifugal injection cup has two gear oil pumps working synchronously, medium-sized and pint-sized centrifugal injection cup has one gear oil pump, and every oil pump has one motor as drive. The oil pump aspirates out oil box's lube through the oil suction pipe and transits it into the gearbox through the condenser, lubricates high gear by the oil injection nozzle, and lubricates the rolling bearings, which are in the gearbox and on the principal shaft, by oil mist produced with the rotate of the gear.

4) **Oil way safety alarm device**

The centrifugal spray can't work under oil-losing condition. Therefore, the safety alarm device is fixed on large-sized and medium-sized injection cup's oil way and all generic-sized injection cups have been equipped with the electric contact pressure gauge to control and protect the safety work of oil way. When the oil mass is under the oil level line or there are some failures in the oil pump and pipeline, then it can't normally work, and the alarm system will give an alarm automatically, cut the primary motor synchronously, and then the injection cup will stop operating.

5) **Sealing device**

The lube of The centrifugal spray is sealed by the oil retaining sleeve on the principal shaft and the oil retaining tube on the seat of direct bearing. (See figure B) In order to ensure its sealing performance, every time replace the main bearing, need to renew the oil retaining sleeve synchronously, and cannot reuse the oil retaining sleeve disassembled. When the oil retaining pipe leaves factory, it has been sealed and fastened, and has been tested whether it leaks oil. It is unnecessary to disassemble this part during normal mend and maintenance, avoiding oil leak. This machine sealing device can satisfy normal needs, if customers have some special demands, you can add a set of air sealing device.

Changzhou Kodi Machinery Co.,Ltd.

6) **Cooling unit**

Due to drying tower's comparatively high inner temperature, in order to ensure The centrifugal spray fixed on the top of drying tower to work normally, control the temperature of lube under 70℃, therefore there is a stainless steel condenser fixed in all kinds of The centrifugal spray. Use water supply or water pump to input water into the condenser, the water inlet pipe should be connected with the lower pipe coupling. The water outputs from another pipe coupling automatically after cycling, and water inflow is proper for controlling the water temperature under 60℃. If customers have any demand, it can be added an air-cooling unit.

Installation preparation

1) The high centrifugal injection cup work well under a steady condition, should proofread the horizontal position of flange face on the top of drying chamber before installation, and mat the hard asbestos pad on the flange face.
2) The primary motor and oil pump motor have to been solely connected up and controlled respectively and it is not allowed to connect these two circuits together.

Starting procedure

1) Check the oil mass of the oil box by the oil dipstick before startting, generally it should be appreciably under the upper oil level line (beyond the highest oil level line will result in oil leak), but it cannot under the lower oil level line absolutely.
2) Start the oil pump motor at first, check it if the oil has not ascend yet after the operation of the oil pump:
   Whether the circuit of the oil pump is connected reversely (the rotation direction of the oil pump motor as the arrow shown)
   Whether the oil pipe is broken, the pipe coupling is loose;
   Whether the filter screen of the oil suction pipe is blocked.
3) Once the oil pump work normally, turn the shaft coupling by hand, if it touches flexible, and then you can start up the primary motor, pay attention that the rotation direction should be as the arrow shown, The centrifugal spray equipped with the transducer should speed its rotation step by step.
4) Once work normally, start up the cooling system.
5) Spray clear water for several minutes before feeding, in order to decrease the partial temperature of the spray disc, at first add a spot of feed, then add the quality of feed gradually, finally add normal feed after the injection cup run for several minutes.

Changzhou Kodi Machinery Co.,Ltd.

Daily maintenance

The centrifugal spray is the most precise part of the spray drier, and its maintenance is especially important.

Checking the oil way system

1) Always check the oil level of oil box and check method is that draw back the oil dipstick (see figure D), and the oil level cannot under lower level line when the primary motor doesn't work, otherwise should add new oil in time;
2) During the use of The centrifugal spray, the oil suction pipe (figure C) should be disassembled and clean its filter screen in the kerosene carefully every week. This cleaning work is very important!
3) Always check whether the oil way safety alarm device (or the electric contact pressure gauge) works normally, the check method is the primary motor cannot start up when the oil pump doesn't start.
4) Once the oil pump and primary motor are started up, survey oil pump's working and oil spray condition through the oil pressure gauge and the viewing window of the gearbox, and check whether the pipeline leaks oil. Find any problem, and stop to overhaul right now;
5) After use, customs should replace oil once every two thousands operating hours, if The centrifugal spray hasn't been used for a long time, replace the lube in the oil box when reuse it, and blew out old oil existed in the oil pipe of the condenser.
6) In order to ensure effective lubricate, one of the flowing lubes is recommended when renew oil:
   46# steam-turbine oil 32# machine oil

Cleanout of the feed and spray feed system

1) Every time spraying of feed liquid has been finished continuously, infuse clear water through feed pipe and make the injection cup work more than ten minutes, complete primary cleanout, when the heater is not turned off;
2) Hang out The centrifugal spray, and disassemble the spray disc and feed liquid distribution plate according to the prompted method in figure B (the nut used to fix the spray disc is left-handed (left-hand thread) nut, do not screw it in a wrong direction while disassembling). Using a wrench to screw off the spring seat, and at this time the spring, the spring washer, and the direct bearing will automatically fall off in turn, and then put these disassembled parts into clean liquid and clean it drastically. It is not allowed leaving any feed remains on the spray disc, avoiding influencing the normal operation of the injection cup. This cleaning work is especially important for spraying the high-viscosity feed;
3) Well-cleaned parts should be placed on clean cloth or paper, and dry it with clean cotton cloth or silk cloth (do not use the thread waste of cotton yarn to scrub away all parts of The centrifugal spray);
4) Reassemble the disassembled parts in turn, and every part needs to be screwed to the right position. When you fix the feed liquid distribution plate, you can use a hammer to knock the special wrench's handgrip. And you should try your best to screw down two left-handed nuts of the spray disc, avoiding loose when it rotates highly;
5) The above cleaning work is very important, implement it carefully, and otherwise it will cause the feed to lock the principal shaft and broke the principal shaft

Changzhou Kodi Machinery Co.,Ltd.

Renewal method of vulnerable part

Renewal of principal shaft's bearing (see figure A, B)

1) Hang out the whole centrifugal injection cup, and fix it on the installation stand;
2) Screw off the screws on the bottom of gearbox, not to screw and remove the screws connecting the upper case with the lower case, and hang out the whole case;
3) Screw the screw fixed on the bearing cover, because it is limited by space position, so the screw cannot be completely screwed off once;
4) Disassemble the spray disc (the removing method as above), use a wood hammer to tap the lower of principal shaft, then screw off the fix screw when the upper bearing cover touches the screw, and then take out the principal shaft;
5) Clamp the thickest end of the principal shaft on a table-vice, whose jaw is made by soft metal, screw off the safety nut used to fix the gear, take out the safety washer, and take out the gear by a spring exerciser.
6) Use a wood hammer to evenly and gently knock down the upper bearing cover, and then take out the bearing of the principal shaft by a spring exerciser.
7) Pull down and take out the oil retaining sleeve by a slotted screwdriver;
8) Take out the principal shaft on a table-vice, one person vertically holds it with both hands, another person uses copper hammer to evenly and gently knock down the bearing, do not knock the principal shaft on the ground or table, avoiding destroying principal shaft's original precision;
9) The disassembled bearing cannot be reused, when install new bearing, preheat it in the 100℃--110℃ hot machine oil;
10) After 2000 hours operation of The centrifugal spray, no matter it is good or bad, replace the bearing of the principal shaft.

Renewal of the gearbox's bearing

1) Take out the whole oil pipe and the screws and pins used to fix the upper and lower cases;
2) Use a wrench to screw downwards the lifting screw on the upper case, then the upper and lower cases can be separated;
3) Take out all bearings of case by a spring exerciser in turn;
4) Installing a new radial-thrust bearing, readjust upper gland bush's gap. The readjustment can be finished in the way of adding or reducing the amount of the gland bush washer, in order to ensure gearbox's flexible operation;
5) After 4000 hours operation of The centrifugal spray, no matter it is good or bad, replace all the gearbox bearings.

The disassemble methods of the spray disc and feed liquid distribution plate

1) Insert the attached copper stop lever into the hole in the spray disc ⑽, do not loose your grip;
2) Use the attached double offset ring spanner to screw off acorn and hex retaining nut (left-hand thread) ⑾ ⑿;
3) Screw the special lifting nut (attached in the machine);
4) Upwards screw the screw of lifting nut by a wrench emphatically, then the spray disc will disengage from the principal shaft normally;
5) Insert the special circular wrench (attached in the machine) into the slot of the distribution plate, and then screw off the distribution plate emphatically (plus thread) ⑼.

Changzhou Kodi Machinery Co.,Ltd.

Common troubleshooting

Failure symptom	Reason	Troubleshooting Method
There is oil on the spray disc, and there is oil contamination in feed.	1. When the injection cup is stopped, the machine oil in the gearbox is beyond the oil dipstick's upper level line. 2. The oil retaining sleeve looses and takes off. 3. The oil draining screw hasn't screwed down.	1.Draw out overfull machine oil. 2.Replace the oil retaining sleeve. 3.Coat the raw material belt on the oil draining screw, and screw down it again.
The oil doesn't flow on the oil way, and the oil isn't sprayed in the gearbox.	1. The oil level in the oil box is under the dipstick's lower level line. 2. The filter screen is blocked. 3. The oil way is broken, and the collar nut is loosed.	1. Add new machine oil. 2. Clean the filter screen of the oil suction pipe. 3. Replace the broken oil pipe, and screw down its collar nut.
The main machine librating.	1. There are some feed remains on the spray disc, and they influence the balance. 2. The feed liquid distribution plate is blocked, and its distribution isn't even. 3. The bearing is broken. 4. The principal shaft is bent.	1. Clean off the feed remains on the spray disc. 2. Launder the feed liquid distribution plate. 3. Check and renew the broken bearing. 4. Renew the principal shaft.

Changzhou Kodi Machinery Co.,Ltd.

Figure A

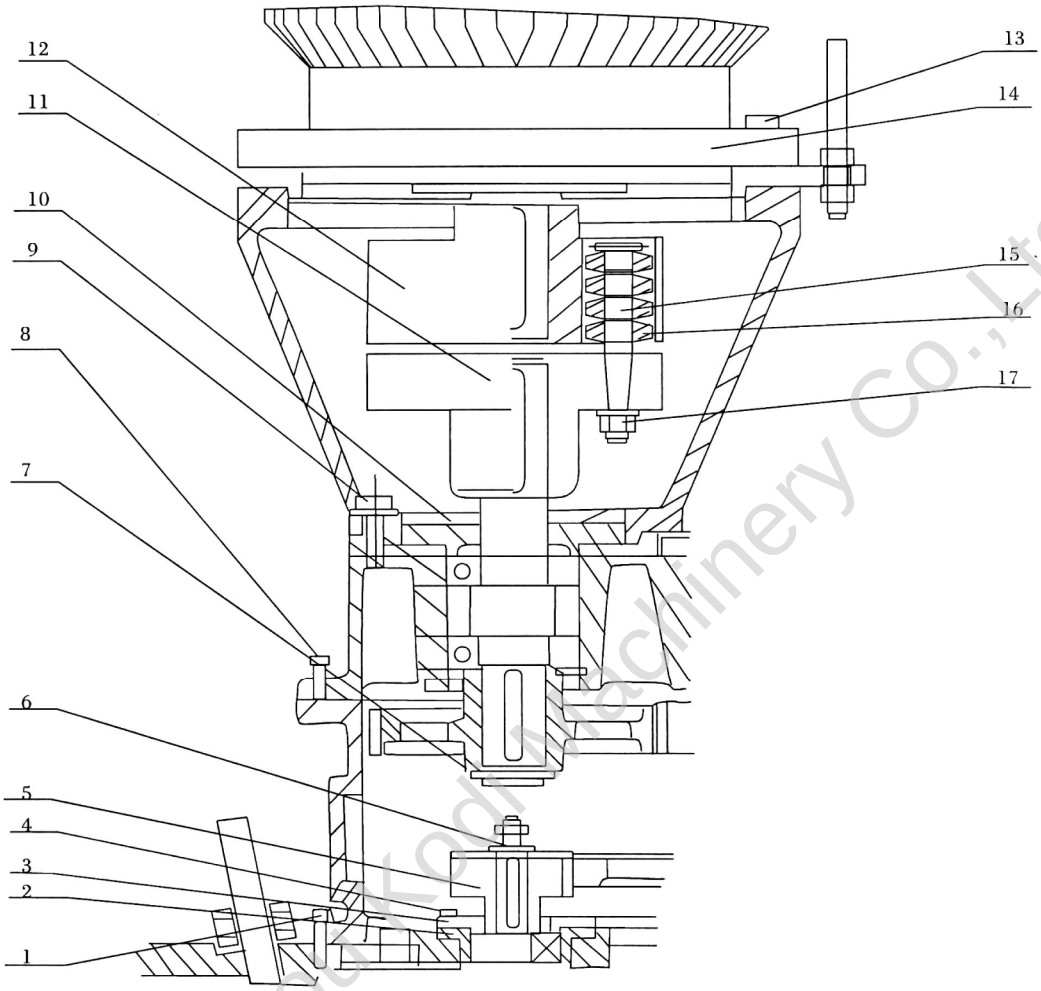

1. Fix screw 2. Upper bearing seat 3. Upper bearing cover 4. Holding screw
5. Principal shaft gear 6. Safety nut 7. Safety screw 8. Lifting screw
9. Motor cabinet screw 10. Upper gland bush 11. Lower shaft coupling
12. Upper shaft coupling 13. Motor screw 14. Primary motor 1 5. Pin
16. Elastic washer 17. Nut

Changzhou Kodi Machinery Co., Ltd.

Figure B

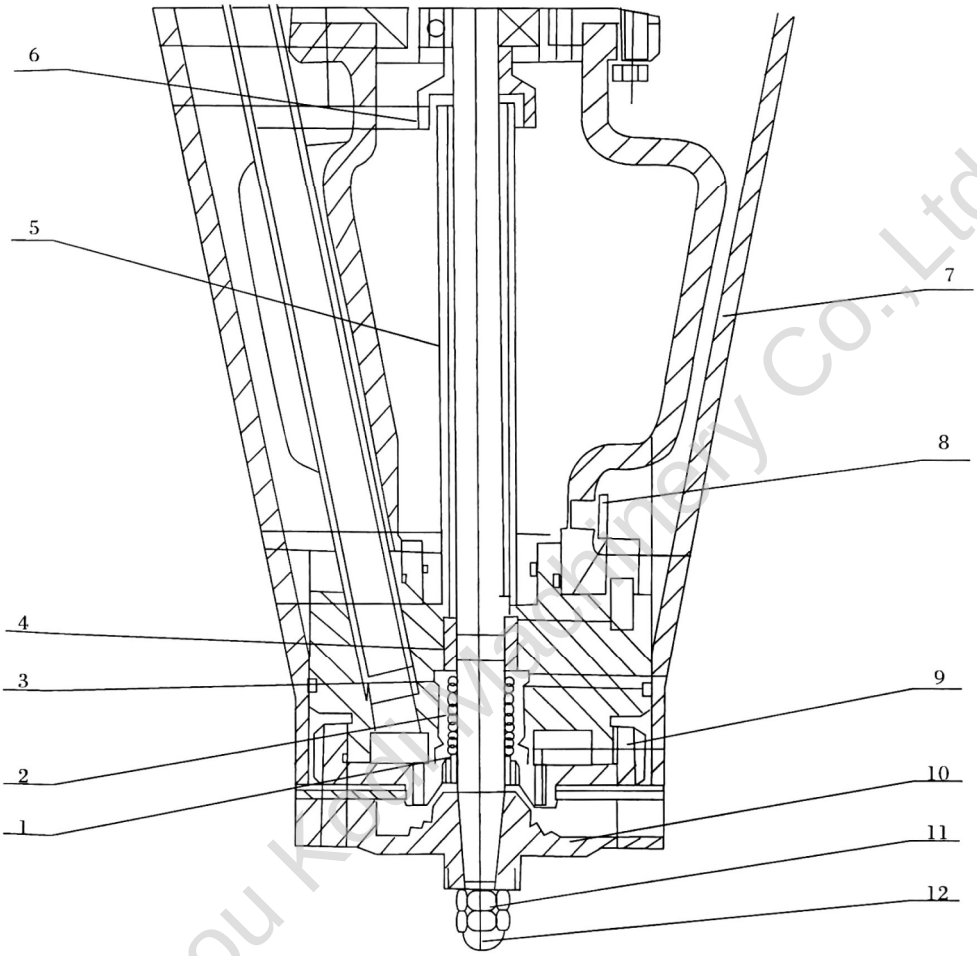

1. Spring seat 2. Spring 3. Spring washer 4. Direct bearing
5. Oil retaining pipe 6. Oil retaining sleeve 7. Cone outer casing
8. Oil draining screw 9. Feed liquid distribution plate 10. Spray disc
11. Left-handed hex nut 12. Left-handed acorn nut

Changzhou Kelly Machinery Co., Ltd.

Figure C

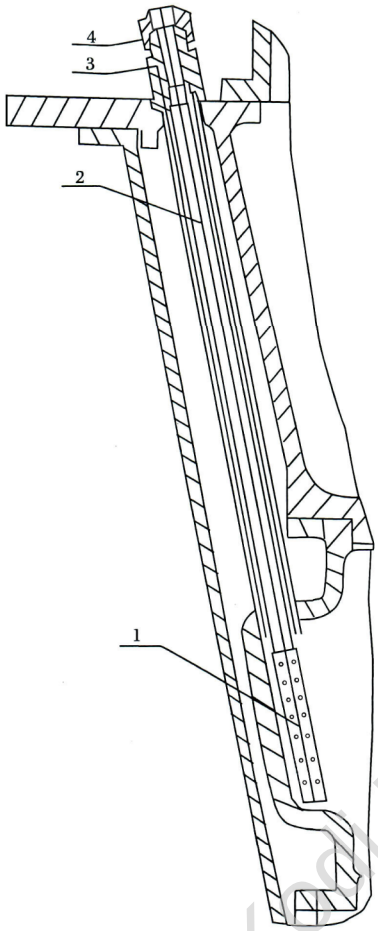

1. Filter screen
2. Oil suction pipe
3. Pipe coupling of the Oil suction pipe
4. Copper pipe nut

Figure D

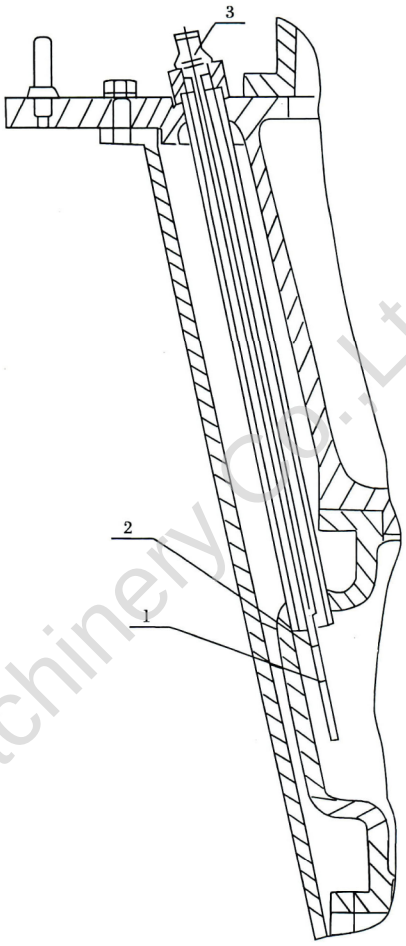

1. Oil dipstick lower lineation
2. Oil dipstick upper lineation
3. Oil dipstick head

Changzhou Kell Machinery Co., Ltd.

The circuit schematic diagram of the protective device controlled by the electric contact oil pressure.

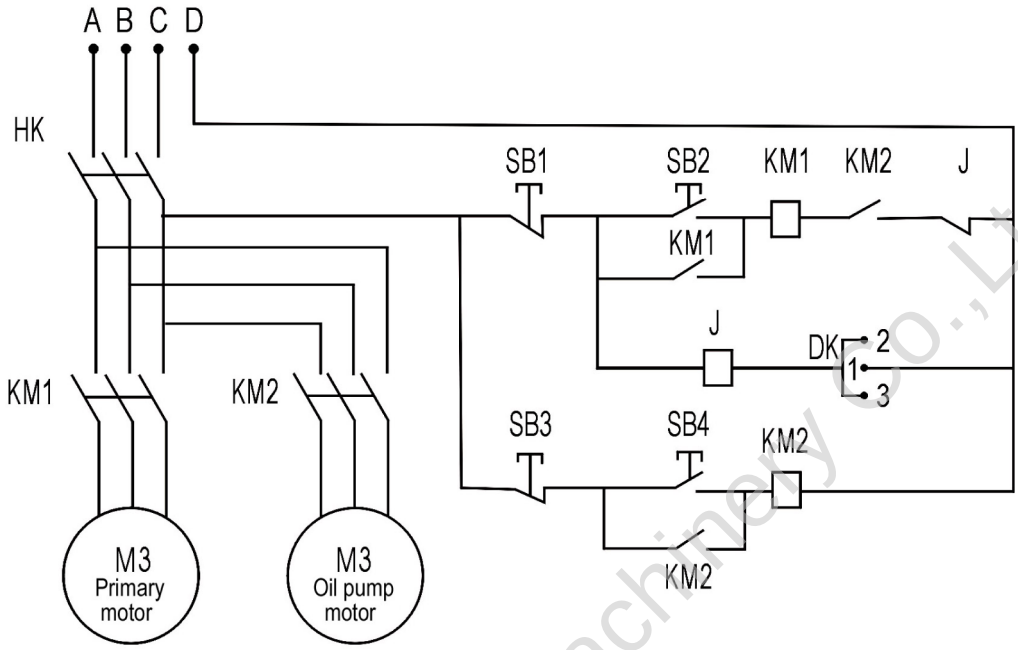

1. HK---- air switch.
2. B1-SB4---- switching push button.
3. J ----auxiliary relay.
4. DK ----oil pressure gauge.
5. KM1-2---- AC contactor.

Changzhou Kodi Machinery Co.,Ltd.